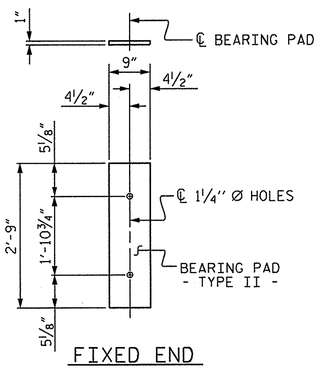

FIXED END
(TYPE II - 20 REQ'D)

ELASTOMERIC BEARING DETAILS

ELASTOMER IN ALL BEARINGS SHALL BE 60 DUROMETER HARDNESS.

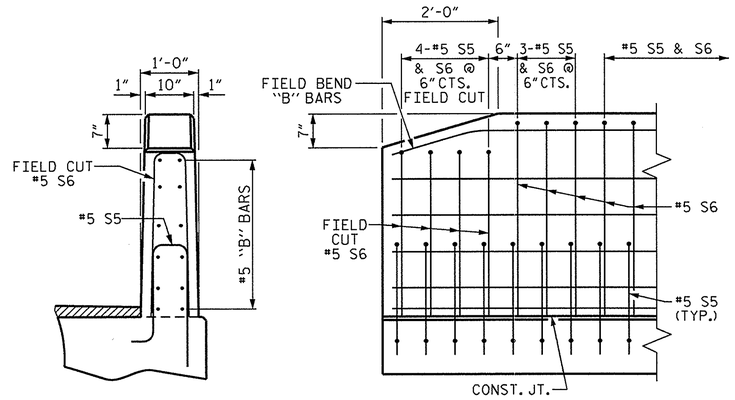

END VIEW

SIDE VIEW

END OF RAIL DETAILS

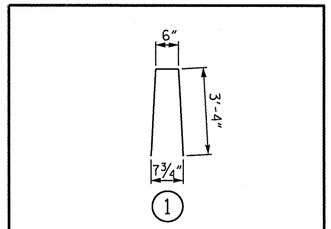

BAR TYPE

BAR DIMENSIONS ARE OUT TO OUT

GUTTERLINE ASPHALT THICKNESS & RAIL HEIGHT		
	ASPHALT OVERLAY THICKNESS @ MID-SPAN	RAIL HEIGHT @ MID-SPAN
95' UNITS	2"	3'-8½"

BILL OF MATERIAL FOR VERTICAL CONCRETE BARRIER RAIL					
BAR	BARS PER PAIR OF EXTERIOR UNITS	SIZE	TYPE	LENGTH	WEIGHT
	95' UNIT				
✻B11	192	#5	STR	13'-6"	2703
✻S6	256	#5	1	7'-2"	1914
✻EPOXY COATED REINFORCING STEEL			LBS.		4617
CLASS AA CONCRETE			CU.YDS.		25.5
TOTAL VERTICAL CONCRETE BARRIER RAIL			LN. FT.		190.0

BOX BEAM UNITS REQUIRED			
	NUMBER	LENGTH	TOTAL LENGTH
EXTERIOR B.B.	2	95'-0"	190'-0"
INTERIOR B.B.	8	95'-0"	760'-0"
TOTAL	10	———	950'-0"

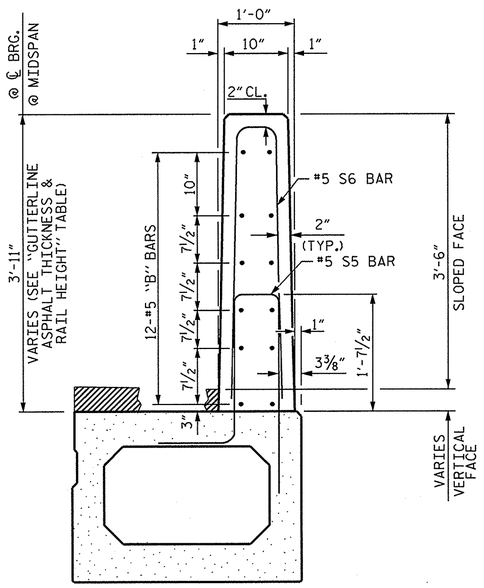

SECTION THRU RAIL

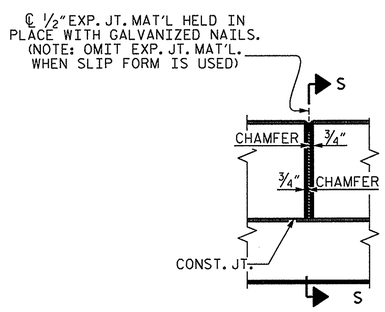

ELEVATION AT EXPANSION JOINTS

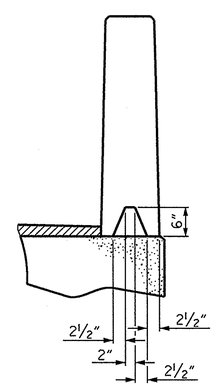

SECTION S-S
AT DAM IN OPEN JOINT
(THIS IS TO BE USED ONLY WHEN SLIP FORM IS USED)

VERTICAL CONCRETE BARRIER RAIL DETAILS

PROJECT NO. BD-5012Z
PITT COUNTY
STATION: 16+09.43 -L-

SHEET 5 OF 5

STATE OF NORTH CAROLINA
DEPARTMENT OF TRANSPORTATION
RALEIGH

STANDARD
3'-0" X 3'-3"
PRESTRESSED CONCRETE
BOX BEAM UNIT

NORTH CAROLINA PROFESSIONAL SEAL 22005 ENGINEER KEITH PASCHAL
11.26.13

REVISIONS						SHEET NO.
NO.	BY:	DATE:	NO.	BY:	DATE:	S-9
1			3			TOTAL SHEETS
2			4			16

ASSEMBLED BY : C. B. PRUETT DATE :10/17/13
CHECKED BY : M. D. PISO DATE :10/25/13
DRAWN BY : DGE 10/11
CHECKED BY : TMG 11/11

26-NOV-2013 07:47
S:\DPG1\Keith\BD-5102Z\Final Plans\BD-5102Z_SD_BX.dgn
kpaschal

STD. NO. 39PCBB8_75&105S