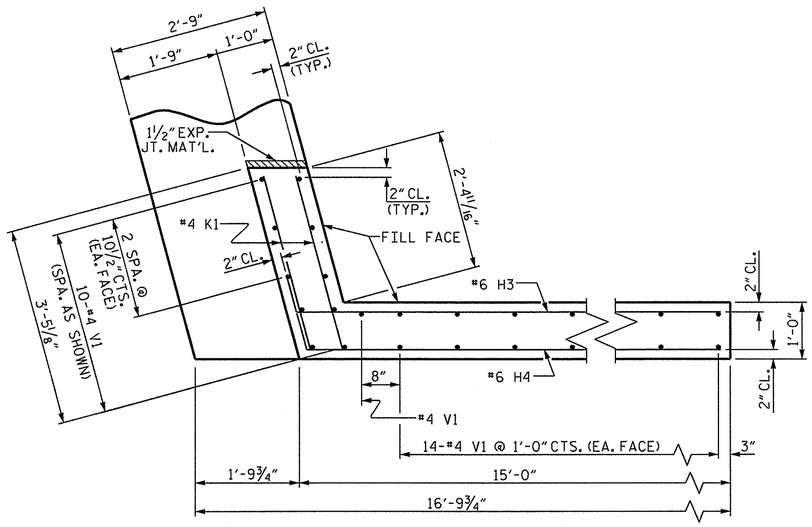

PLAN OF WING (W1)

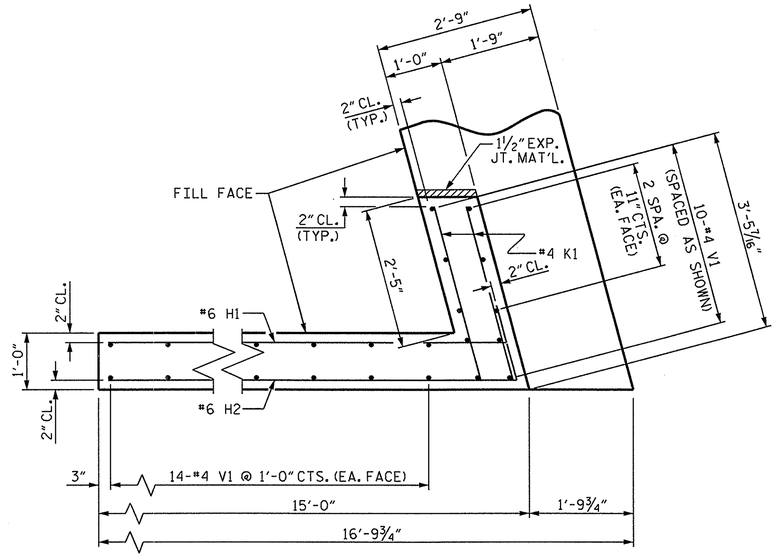

PLAN OF WING (W2)

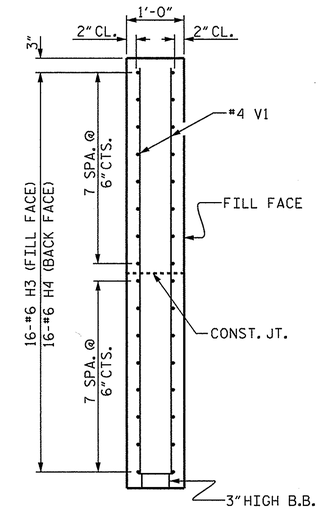

SECTION X-X

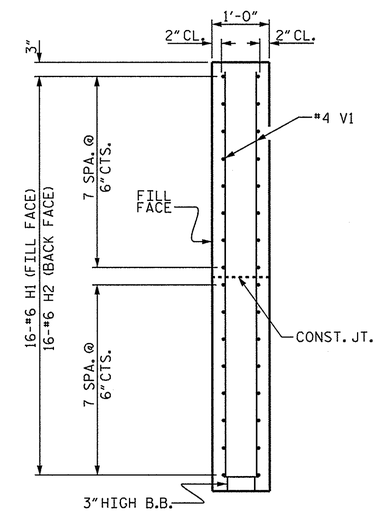

SECTION Y-Y

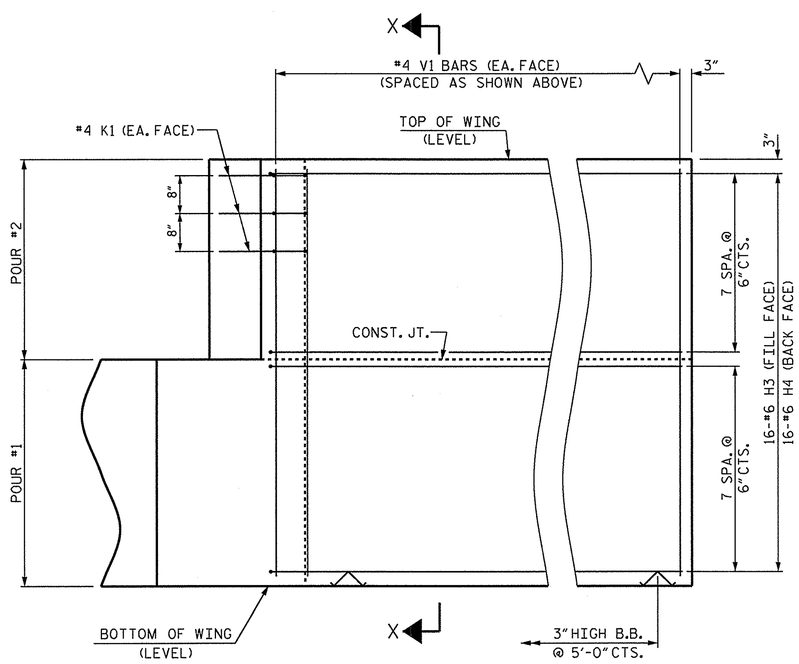

ELEVATION OF WING (W1)

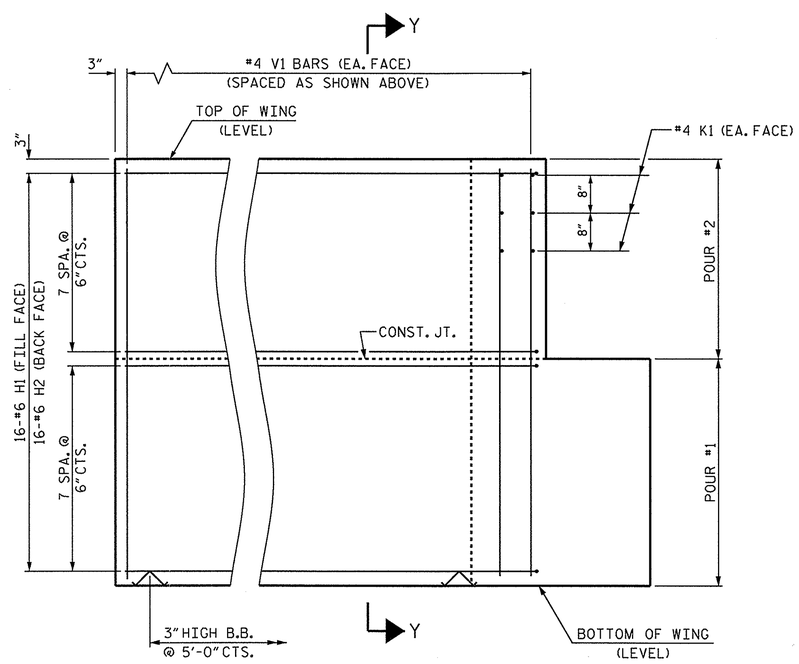

ELEVATION OF WING (W2)

WING DETAILS

PROJECT NO. BD-5102Z

PITT COUNTY

STATION: 16+09.43 -L-

SHEET 3 OF 4

STATE OF NORTH CAROLINA
DEPARTMENT OF TRANSPORTATION
RALEIGH

SUBSTRUCTURE

END BENT
WING DETAILS

NORTH CAROLINA PROFESSIONAL SEAL 22005 ENGINEER A. KEITH PASCHAL
11-26-13

REVISIONS						SHEET NO.
NO.	BY:	DATE:	NO.	BY:	DATE:	S-13
1			3			TOTAL SHEETS
2			4			16

ASSEMBLED BY : C. B. PRUETT	DATE : 10/17/13
CHECKED BY : M. D. PISO	DATE : 10/25/13
DRAWN BY : WJH 12/11	
CHECKED BY : AAC 12/11	

26-NOV-2013 07:47
S:\DPG1\Keith\BD-5102Z\Final Plans\BD-5102Z_SD_BX.dgn
kpaschal

STD. NO. EB_30_75S4_39BB