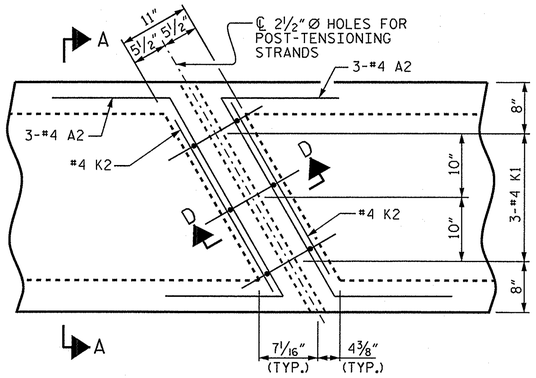


PLAN

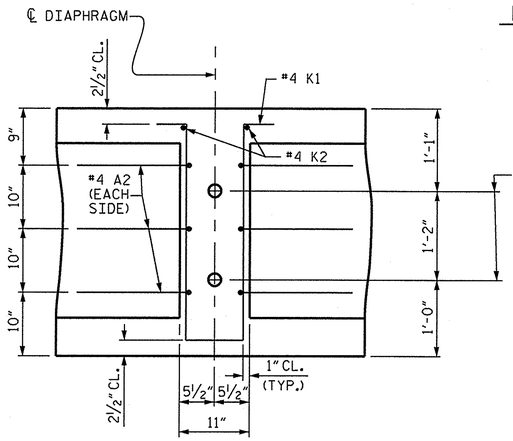


SECTION D-D

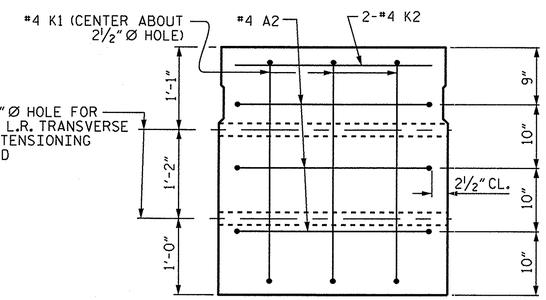


SECTION A-A
VOIDS NOT SHOWN

## DOUBLE DIAPHRAGM DETAILS

#4 "S" BARS NOT SHOWN. #4 "S" BARS MAY BE SHIFTED SLIGHTLY TO CLEAR 2½" Ø HOLE.

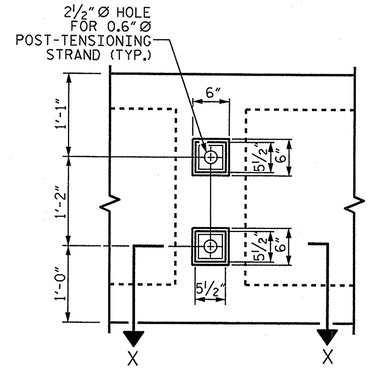


VIEW Y-Y
SHOWING ELEVATION VIEW OF GROUTED RECESS

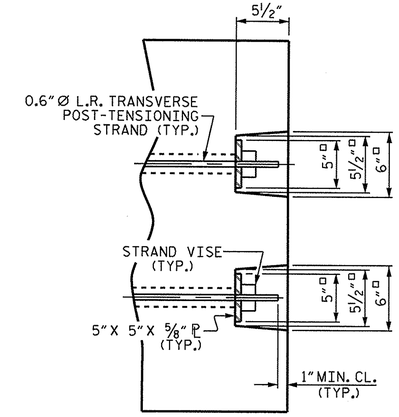


DETAIL "C"

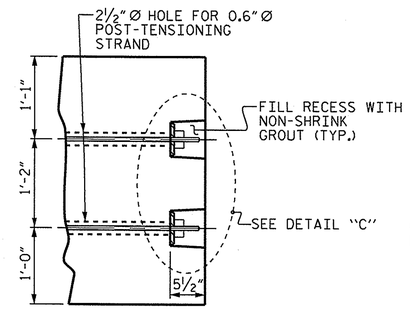


PART SECTION AT RECESS

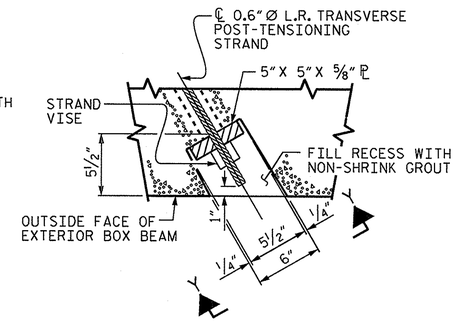


SECTION X-X
SHOWING PLAN VIEW OF GROUTED RECESS

## GROUTED RECESS DETAIL AT END OF POST-TENSIONED STRANDS OF EXTERIOR BOX BEAM

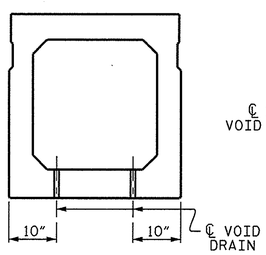


SECTION B-B

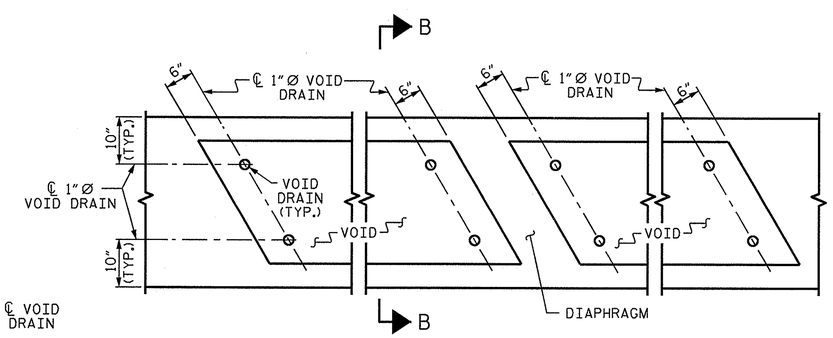


PART PLAN

## VOID DRAIN DETAILS

(DIMENSIONS SHOWN ARE TYPICAL FOR EACH VOID)

| DEAD LOAD DEFLECTION AND CAMBER | |
|---|---|
| | 3'-0" x 3'-3" |
| 95' BOX BEAM UNIT | 0.6" Ø L.R. STRAND |
| CAMBER (SLAB ALONE IN PLACE) | 3½" ↑ |
| DEFLECTION DUE TO SUPERIMPOSED DEAD LOAD** | 1" ↓ |
| FINAL CAMBER | 2½" ↑ |

** INCLUDES FUTURE WEARING SURFACE

PROJECT NO. BD-5102Z
PITT COUNTY
STATION: 16+09.43 -L-

SHEET 4 OF 5

STATE OF NORTH CAROLINA
DEPARTMENT OF TRANSPORTATION
RALEIGH

STANDARD

3'-0" X 3'-3"
PRESTRESSED CONCRETE
BOX BEAM UNIT

NORTH CAROLINA PROFESSIONAL SEAL 22005 ENGINEER KEITH PASCHAL
11-26-13

| REVISIONS | | | | | | SHEET NO. |
|---|---|---|---|---|---|---|
| NO. | BY: | DATE: | NO. | BY: | DATE: | S-8 |
| 1 | | | 3 | | | TOTAL SHEETS |
| 2 | | | 4 | | | 16 |

ASSEMBLED BY : C. B. PRUETT DATE : 10/17/13
CHECKED BY : M. D. PISO DATE : 10/25/13
DRAWN BY : DGE 11/11
CHECKED BY : TMG 11/11

26-NOV-2013 07:47
S:\DPGI\Keith\BD-5102Z\Final Plans\BD-5102Z_SD_BX.dgn
kpaschal

STD.NO.39PCBB7_75S