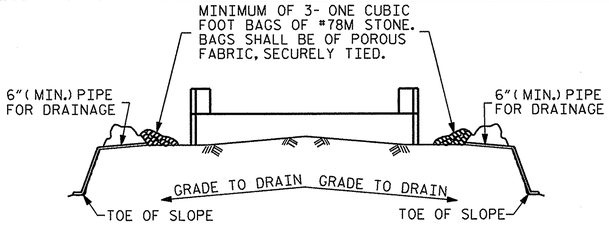

BAGGED STONE AND PIPE SHALL BE PLACED IMMEDIATELY AFTER COMPLETION OF END BENT EXCAVATION. PIPE MAY BE EITHER CONCRETE, CORRUGATED STEEL, CORRUGATED ALUMINUM ALLOY, OR CORRUGATED PLASTIC. PERFORATED PIPE WILL NOT BE ALLOWED.

BAGGED STONE SHALL REMAIN IN PLACE UNTIL THE ENGINEER DIRECTS THAT IT BE REMOVED. THE CONTRACTOR SHALL REMOVE AND DISPOSE OF SILT ACCUMULATIONS AT BAGGED STONE WHEN SO DIRECTED BY THE ENGINEER. BAGS SHALL BE REMOVED AND REPLACED WHENEVER THE ENGINEER DETERMINES THAT THEY HAVE DETERIORATED AND LOST THEIR EFFECTIVENESS.

NO SEPARATE PAYMENT WILL BE MADE FOR THIS WORK AND THE ENTIRE COST OF THIS WORK SHALL BE INCLUDED IN THE UNIT CONTRACT PRICE BID FOR THE SEVERAL PAY ITEMS.

TEMPORARY DRAINAGE AT END BENT

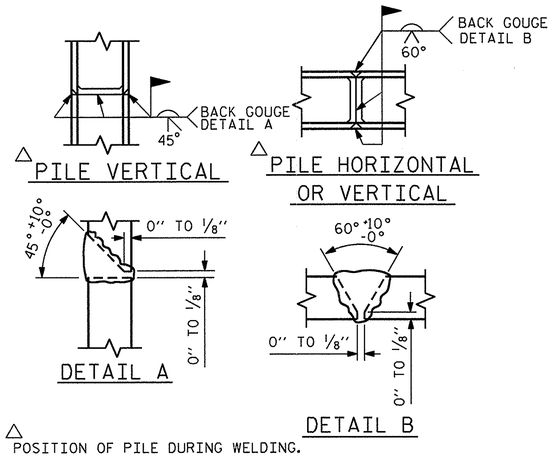

PILE SPLICE DETAILS

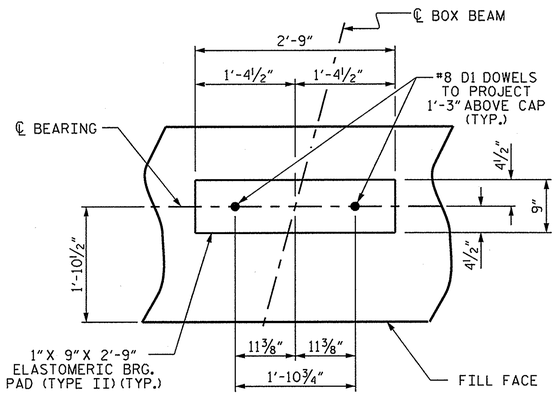

DETAIL "A"

(END BENT No. 1 SHOWN, END BENT No. 2 SIMILAR BY ROTATION)

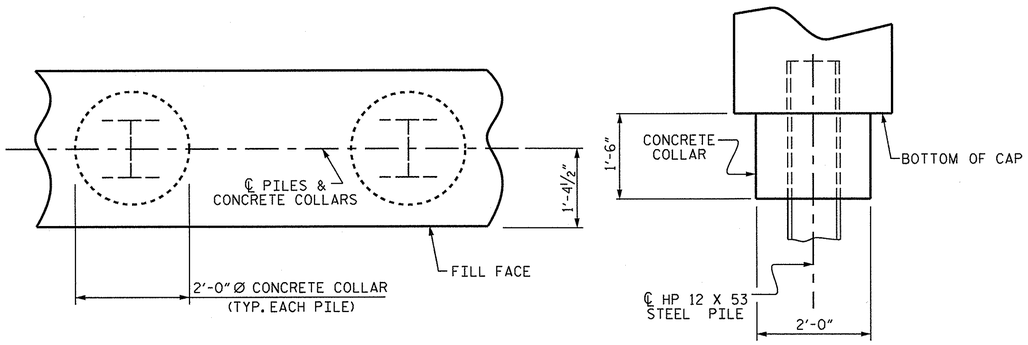

PLAN

ELEVATION

CORROSION PROTECTION FOR STEEL PILES DETAIL

(END BENT No. 1 SHOWN, END BENT No. 2 SIMILAR BY ROTATION)

BAR TYPES

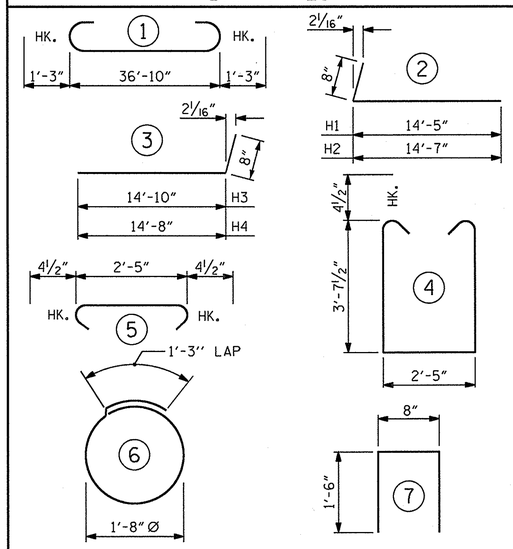

ALL BAR DIMENSIONS ARE OUT TO OUT.

END BENT No. 1		END BENT No. 2	
HP 12 X 53 STEEL PILES		HP 12 X 53 STEEL PILES	
NO: 5	LIN. FT.= 400	NO: 5	LIN. FT.= 400
PILE REDRIVES	EA. 3	PILE REDRIVES	EA. 3
STEEL PILE POINTS	EA. 5	STEEL PILE POINTS	EA. 5

BILL OF MATERIAL FOR ONE END BENT

BAR	NO.	SIZE	TYPE	LENGTH	WEIGHT
B1	8	#9	1	39'-4"	1070
B2	28	#4	STR	19'-9"	369
B3	10	#4	STR	2'-5"	16
D1	20	#8	STR	2'-3"	120
H1	16	#6	2	15'-1"	362
H2	16	#6	2	15'-3"	366
H3	16	#6	3	15'-6"	372
H4	16	#6	3	15'-4"	368
K1	12	#4	STR	3'-1"	25
K2	12	#4	STR	19'-9"	158
S1	48	#4	4	10'-5"	334
S2	48	#4	5	3'-2"	102
S3	20	#4	6	6'-6"	87
U1	31	#4	7	3'-8"	76
V1	77	#4	STR	7'-8"	394
V2	62	#4	STR	5'-10"	242

REINFORCING STEEL (FOR ONE END BENT) 4461 LBS.

CLASS A CONCRETE BREAKDOWN (FOR ONE END BENT)

POUR #1 CAP, LOWER PART OF WINGS & COLLARS 20.3 C.Y.

POUR #2 BACKWALL & UPPER PART OF WINGS 7.7 C.Y.

TOTAL CLASS A CONCRETE 28.0 C.Y.

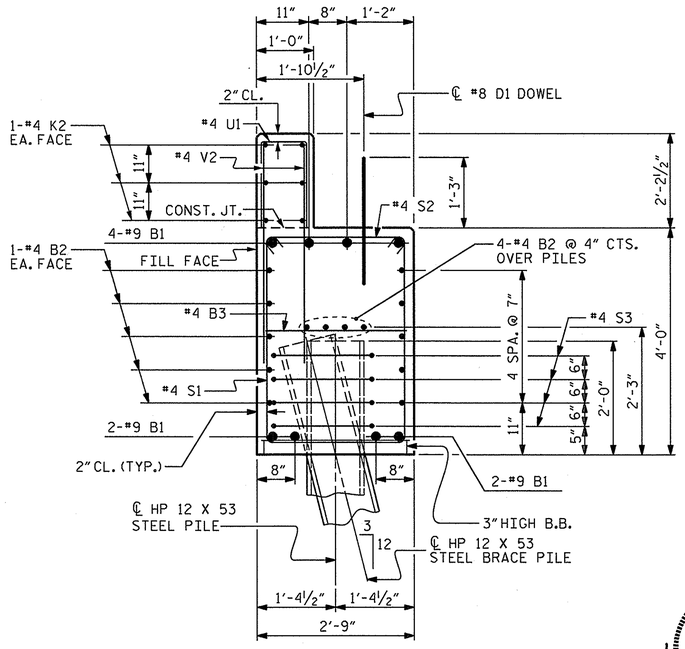

SECTION A-A

(CONCRETE COLLAR NOT SHOWN FOR CLARITY. SEE "CORROSION PROTECTION FOR STEEL PILES DETAIL.")

NORTH CAROLINA PROFESSIONAL SEAL 22005 ENGINEER KEITH PASCHAL
11-26-13

PROJECT NO. BD-5102Z
PITT COUNTY
STATION: 16+09.43 -L-

SHEET 4 OF 4

STATE OF NORTH CAROLINA
DEPARTMENT OF TRANSPORTATION
RALEIGH

SUBSTRUCTURE

END BENT No. 1 & 2 DETAILS

REVISIONS						SHEET NO.
NO.	BY:	DATE:	NO.	BY:	DATE:	S-14
1			3			TOTAL SHEETS
2			4			16

ASSEMBLED BY :	C. B. PRUETT	DATE :	10/17/13
CHECKED BY :	M. D. PISO	DATE :	10/25/13
DRAWN BY :	WJH	12/11	
CHECKED BY :	AAC	12/11	

26-NOV-2013 07:47
S:\DPG1\Keith\BD-5102Z\Final Plans\BD-5102Z_SD_BX.dgn
kpaschal

STD. NO. EB_30_75S4_39BB