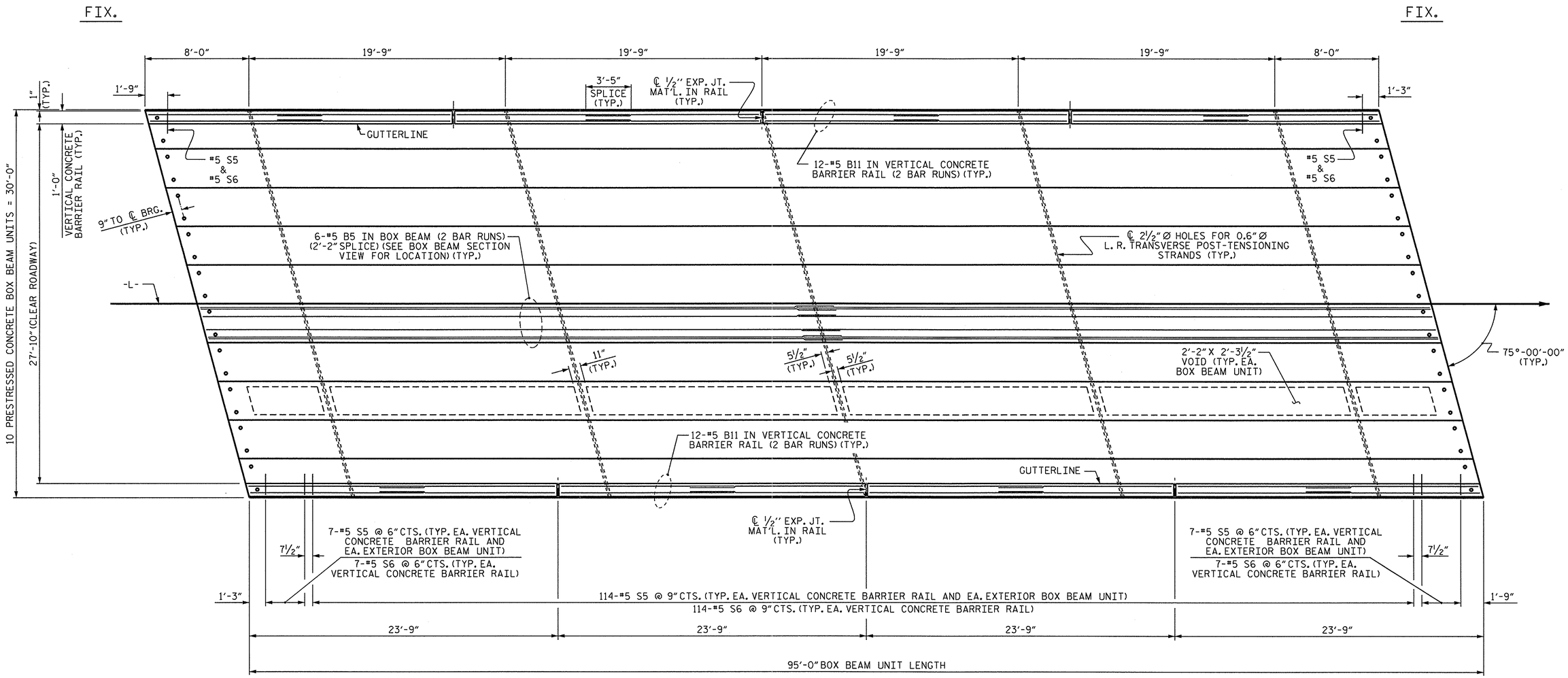

PLAN OF UNIT

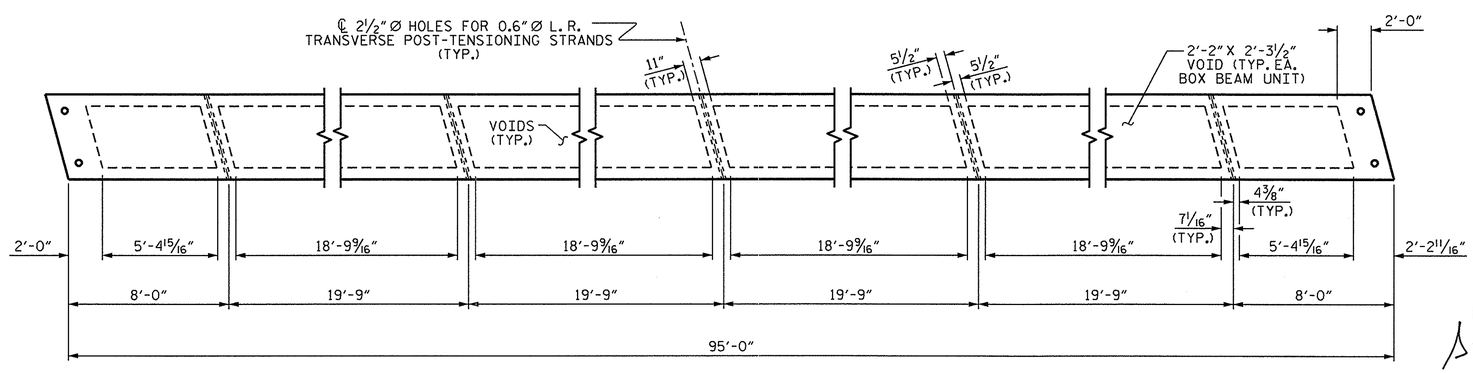

DIAPHRAGM AND VOID LAYOUT

PROJECT NO. BD-5102Z

PITT COUNTY

STATION: 16+09.43 -L-

SHEET 2 OF 5

STATE OF NORTH CAROLINA
DEPARTMENT OF TRANSPORTATION
RALEIGH

PLAN OF 95' UNIT
27'-10" CLEAR ROADWAY
75° SKEW

NORTH CAROLINA PROFESSIONAL SEAL 22005 ENGINEER KEITH PASCHAL
11-26-13

REVISIONS						SHEET NO.
NO.	BY:	DATE:	NO.	BY:	DATE:	S-6
1			3			TOTAL SHEETS
2			4			16

ASSEMBLED BY :	C. B. PRUETT	DATE : 10/17/13
CHECKED BY :	M. D. PISO	DATE : 10/25/13
DRAWN BY : DGE 8/11		
CHECKED BY : TMG 11/11		

26-NOV-2013 07:47
S:\DPG1\Keith\BD-5102Z\Final Plans\BD-5102Z_SD_BX.dgn
kpaschal

STD.NO.39PCBB_30_75S_95L